# Index Galena Road 6.4-6.9

## BRIDGE SITE PLAN

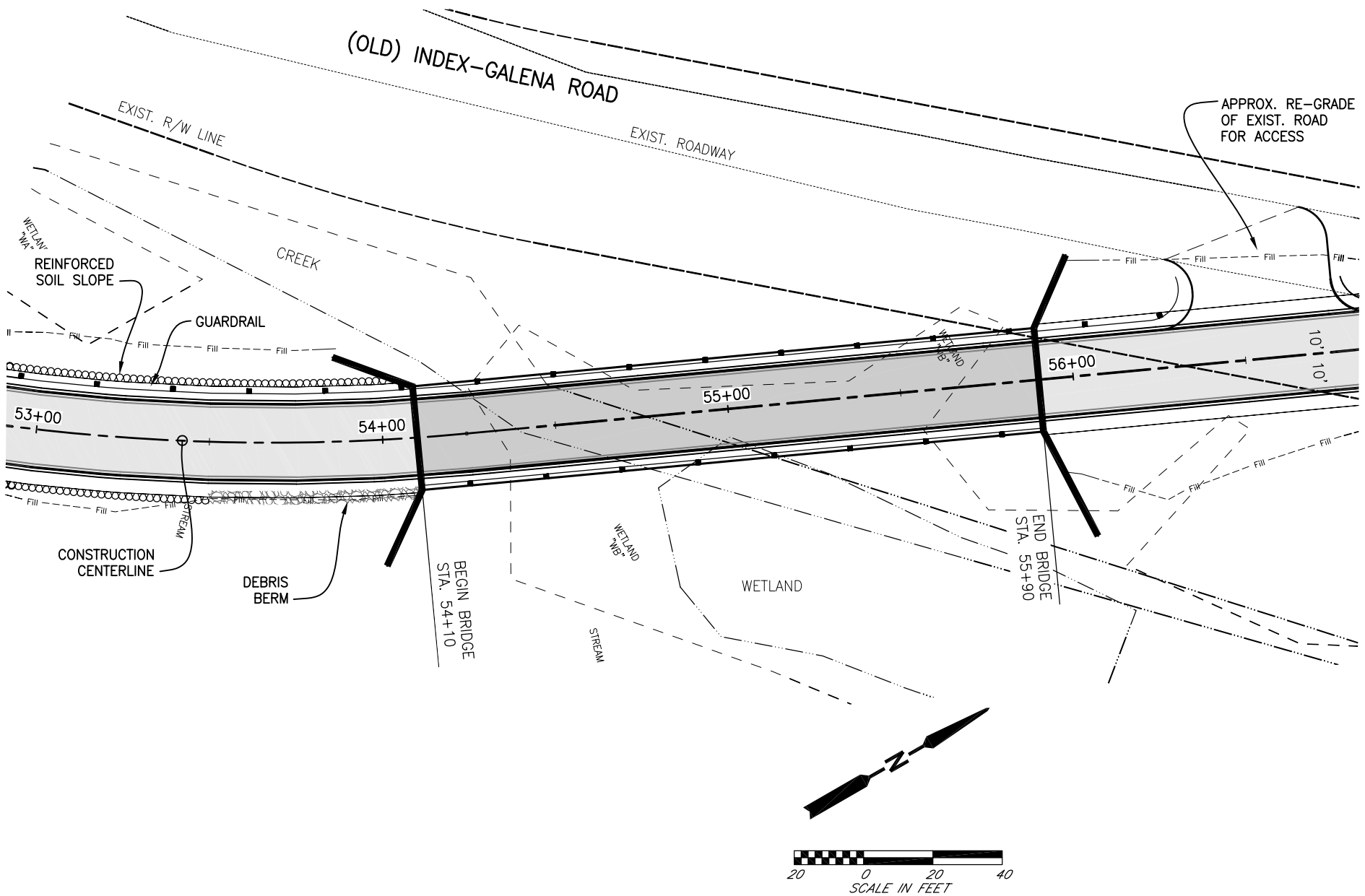


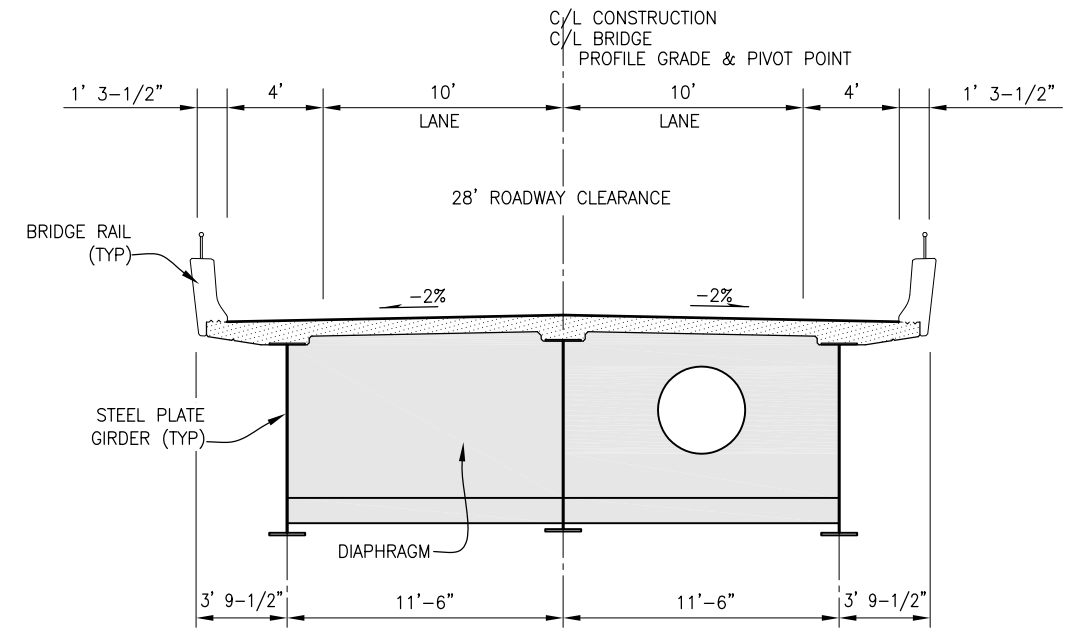


TYPICAL CROSS-SECTION

SCALE: 1/4"= 1'-0"

| PLAN CHECK | BY | DATE |
|---|---|---|
| | | |
| | | |
| | | |
| | | |
| | | |
| | | |
| | | |

| DATE | NO. | REVISION | BY |
|---|---|---|---|
| | | | |

Last Saved By: spwljt Mar 14, 2013 – 4:35pm

| REGION NO. | STATE | FED. AID PROJ. NO. | SURVEY NO. |
|---|---|---|---|
| 10 | WASH. | | 4178 |

DESIGNED BY: L.TARIO, L.BREWER

DRAWN BY: RTR

FIELD BOOK(S):

UPI# 06-0150

**60 PERCENT SUBMITTAL**

SNOHOMISH COUNTY DEPARTMENT OF PUBLIC WORKS

FUNDING NO. RC1532

**INDEX-GALENA ROAD**
RE-ALIGNMENT

**BRIDGE SITE PLAN**

REFERENCE SHEET NO. **BR02**

SHEET OF SHEETS

MARCH 2013 PUBLIC MEETING

Plotted: Mar 27, 2013 – 12:46pm spwljt S:\PW_Project_Data_Management\6-PROJECTS_UPI Year_2006\06-0150\2 CADD\2.1 production data\drawings\Design\Exhibits\APRIL13 PUBLIC\06-0150 Brdg Plan Exhibit.dwg Layout Name: Plan

You created this PDF from an application that is not licensed to print to novaPDF printer (http://www.novapdf.com)